Haptic Teleoperation Gripper

Yukang Hu, Dongjun Tan, Yuqi Wang
University of California, San Diego

***Abstract* — Existing virtual teleoperation systems often lack adequate haptic feedback, creating a "transparency gap" that diminishes the physical realism of human demonstrations. To address this, we present a low-cost, high-fidelity haptic teleoperation gripper based on an impedance-type Hardware-in-the-Loop (HIL) architecture. The system seamlessly synchronizes physical kinesthetic inputs with a PyBullet physics engine in real-time. By employing a dynamic unilateral virtual wall model, the system calculates spatial contact thresholds and modulates virtual stiffness to actuate a DC motor, generating proportional resistive torque. This allows operators to accurately perceive both the geometric size and material compliance of virtual objects. Supported by optimized signal filtering to eliminate mechanical jitter, the interface provides stable bidirectional force feedback, demonstrating significant potential for generating physically consistent data for Sim-to-Real manipulation tasks.**

Keywords: Haptic Feedback, Teleoperation, Hardware-in-the-Loop, Impedance Control, Virtual Environment

I. Introduction

The development of high-performance robotic manipulation policies increasingly relies on large-scale, high-quality demonstration datasets, especially within the Sim-to-Real paradigm. However, traditional data collection through physical robotic systems is often constrained by high hardware costs, maintenance requirements, and limited scalability. As a result, virtual environments have emerged as a promising alternative for scalable data generation. Nevertheless, existing virtual teleoperation systems frequently lack sufficient haptic feedback, leading to a significant “transparency gap” between user actions and perceived interaction forces.

In particular, when operators manipulate virtual objects without force feedback, they are unable to accurately perceive contact events or object properties such as stiffness and rigidity. This limitation often results in unrealistic demonstrations, reducing the effectiveness of collected data for training robotic policies. To address this issue, it is essential to design interfaces that provide synchronized kinesthetic feedback, enabling users to experience physically consistent interactions within simulated environments.

In this project, we present a wearable kinesthetic feedback interface designed for teleoperation of a robotic gripper in a virtual environment. The system establishes a bidirectional interaction loop: user finger motions are captured through high-precision angle sensing and mapped to a virtual gripper, while a motorized actuation mechanism generates reverse torque proportional to simulated interaction forces. This active resistance allows users to perceive contact and grasp forces in real time, thereby improving the realism and fidelity of teleoperation.

Our design focuses on accessibility, scalability, and usability. By employing a lightweight wearable structure and a simplified two-finger interaction paradigm, the system lowers the barrier to large-scale demonstration data collection. Additionally, the integration of force feedback enhances human-in-the-loop control, making the interface suitable for generating high-quality training data for robotic learning systems.

II. Background

Recent advances in teleoperation and haptic feedback systems have demonstrated the importance of combining motion capture with force feedback to achieve realistic and effective human–robot interaction. Vision-based teleoperation frameworks such as DexPilot [1] enable high-fidelity retargeting of human hand motions to robotic manipulators, significantly improving task performance and providing valuable demonstration data. However, these systems primarily focus on motion mapping and lack sufficient haptic feedback, limiting the operator’s ability to perceive interaction forces.

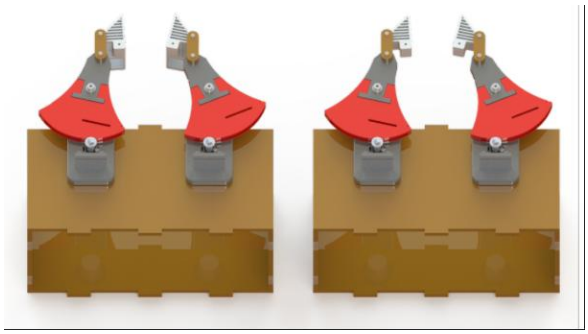

Figure 1 Teleoperated Two-Finger Gripper [5]

To address this limitation, various wearable haptic devices have been developed to provide kinesthetic feedback. Peng et al. [2] introduced a lightweight exoskeleton glove that employs mechanical linkages and impedance control to render grasping resistance, improving perceived realism and safety.

*Research supported by ABC Foundation.

F. A. Author is with the National Institute of Standards and Technology, Boulder, CO 80305 USA (corresponding author to provide phone: 303-555-5555; fax: 303-555-5555; e-mail: author@ boulder.nist.gov).

S. B. Author, Jr., was with Rice University, Houston, TX 77005 USA. He is now with the Department of Physics, Colorado State University, Fort Collins, CO 80523 USA (e-mail: author@lamar. colostate.edu).

T. C. Author is with the Electrical Engineering Department, University of Colorado, Boulder, CO 80309 USA, on leave from the National Research Institute for Metals, Tsukuba, Japan (e-mail: author@nrim.go.jp).

Similarly, Wang et al. [3] proposed a modular glove integrating triboelectric sensing with pneumatic actuation, enabling simultaneous cutaneous and kinesthetic feedback. These works highlight the importance of combining sensing and actuation to achieve closed-loop interaction in teleoperation systems.

In addition to active force-feedback devices, passive force rendering approaches have also been explored. Cassar and Saliba [4] developed a glove based on magnetorheological fluid (MRF), which modulates resistance through controllable damping rather than active actuation. Such passive systems offer inherent safety advantages while still providing perceptual cues about object properties. However, they may lack the dynamic range and responsiveness required for complex interaction scenarios.

Furthermore, prior studies on teleoperated grippers have demonstrated that even simple pinch-based interfaces can effectively convey material properties such as hardness and softness. The work in [5] shows that combining grasp sensing with force feedback enables users to distinguish between different object stiffness levels, supporting more realistic manipulation and interaction, as shown in *Figure 1*.

Building upon these prior works, our system focuses on a compact, wearable, and actively actuated interface that integrates motion sensing and torque-based force feedback within a virtual environment. By leveraging a simplified two-finger gripper paradigm and real-time force rendering, the proposed approach aims to balance system complexity, usability, and scalability for data-driven robotic learning applications.

III. Hardware Design

A. Mechanical Design

The mechanical structure of the system is illustrated in Figure 1. The device consists of a 2-degree-of-freedom (2-DOF) planar linkage mechanism combined with a 1-degree-of-freedom (1-DOF) rotating handle located at the end effector. The full structure can be seen in *Figure 2*.

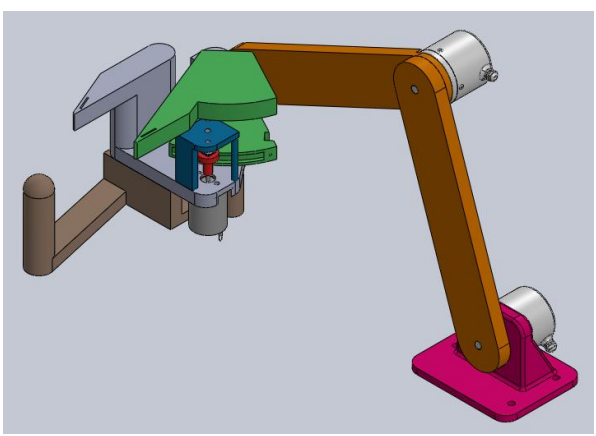

Figure 2 CAD model of the haptic device

The dual-linkage mechanism is responsible for enabling the planar motion of the end effector and is equipped with passive rotary joints for position sensing. This configuration allows the user to freely maneuver the handle within a two-dimensional workspace. The end-effector position is determined through forward kinematics based on the measured joint angles.

At the end effector, an additional rotational degree of freedom is introduced via a bearing-supported handle. This handle is mechanically decoupled from the linkage mechanism, allowing it to rotate independently without affecting the movement of the joints.

A DC motor is integrated within the handle to provide force feedback capabilities. A bearing connection is employed between the linkage mechanism and the handle to ensure smooth rotation while minimizing the transmission of unwanted torque to the joints.

This decoupled design enhances the human-machine interaction experience by enabling natural hand movements, while simultaneously facilitating precise position sensing through the linkage mechanism. The entire structure is designed to minimize friction and ensure the stable operation of the system.

B. Hardware Component

Regarding the hardware aspects of this system, the design incorporates passive joint sensing as well as active force feedback at the end-effector.

Two Model 3806 incremental encoders are responsible for measuring joint positions; these encoders offer high resolution for capturing relative angular data. Testing has demonstrated that they are highly suitable for tracking a user's continuous movements. Furthermore, their compact design makes them particularly convenient for mounting directly onto moving joints. As shown in *Figure 3*.

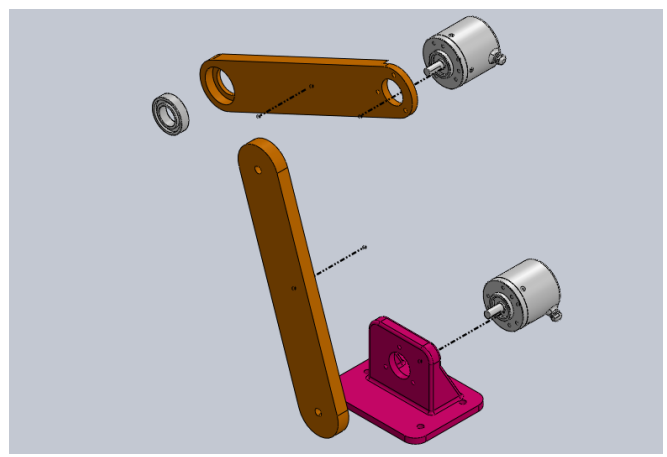

Figure 3 Exploded view of the linkage assembly

In the force-feedback gripper section, an AS5600 magnetic encoder is positioned atop the motor, oriented perpendicularly to the axis of rotation. As the motor rotates, a magnet mounted at the front end of the motor shaft rotates in tandem, enabling the encoder to accurately capture the motor's rotational motion. This precise monitoring ensures a stable output for the force-feedback control mechanism.

The force-feedback functionality is further realized through an RS380 DC motor mounted within the handle assembly. This motor features a compact form factor and delivers greater torque output capabilities compared to the

RS370 model utilized in the Hapkit curriculum. This design ensures effective haptic interaction while simultaneously reducing the mechanical complexity of the overall system.As shown in *Figure 4*.

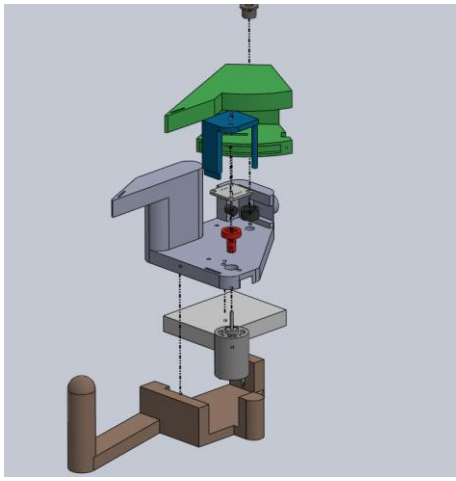

Figure 4 Exploded view of the end-effector handle assembly

C. Sensor Integration

The system integrates both incremental and absolute sensor technologies to ensure that information is captured in the most appropriate manner.

For the two degrees of freedom, a Model 3806 incremental encoder is installed at each joint of the linkage mechanism to measure angular displacement. Since these encoders measure changes in position rather than absolute values, the linkage must be manually set to a "zero" position, serving as the initial reference point, whenever the system is powered on.

Each encoder generates two digital signals (channels A and B) with a 90°phase difference, enabling both angular position tracking and rotation direction detection.

To decode the quadrature signals, a state-based lookup table is employed. At each sampling step, the current and previous states of the encoder signals are combined to form a 4-bit index, which is used to determine the incremental count update. This approach allows robust detection of valid transitions while rejecting invalid state changes due to noise.

The accumulated encoder counts are then converted into joint angles using

$$\theta = \frac{(c + c_{\text{offset}})}{\text{CPR}} \cdot 2\pi \tag{1}$$

where c is the accumulated count, c_{offset} is a calibration offset corresponding to the initial configuration, and CPR denotes the counts per revolution. In our implementation, CPR is set to 2400, accounting for quadrature decoding (i.e., four counts per encoder pulse).

Additionally, a sign inversion is applied to one joint to ensure consistency with the kinematic convention of the planar 2R manipulator. Dynamics can be seen in Figure The measured joint angles are subsequently used in forward kinematics to compute the end-effector position:

$$x = L_1 \cos\theta_1 + L_2 \cos(\theta_1 + \theta_2) \tag{2}$$

$$y = L_1 \sin\theta_1 + L_2 \sin(\theta_1 + \theta_2) \tag{3}$$

where $L_1$and L_2 are the link lengths.

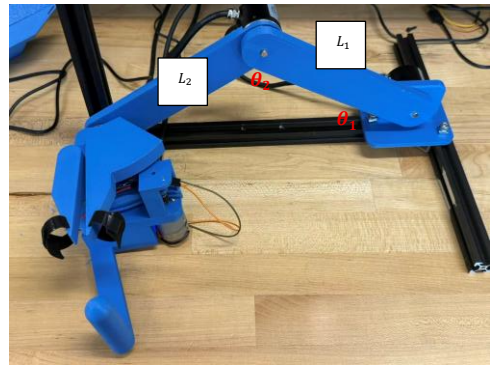

Figure 5 Arm Dynamics

Compared to absolute magnetic encoders, incremental encoders offer higher update rates and lower latency, making them suitable for continuous motion tracking of the linkage. However, they require initialization and are subject to cumulative drift if counts are lost. Therefore, in this system, incremental encoders are used for high-frequency joint tracking, while the absolute magnetic sensor (AS5600) is used for reliable measurement of the gripper state.

At the force-feedback handle, an AS5600 magnetic encoder is employed. This encoder provides absolute angular measurement data, thereby ensuring stable and consistent force feedback.

To measure the gripper aperture angle, a contactless magnetic rotary encoder (AS5600) is employed. The AS5600 operates based on Hall-effect sensing, where an internal array of Hall sensors detects the orientation of a diametrically magnetized permanent magnet mounted on the rotating shaft. By estimating the angular position of the magnetic field vector, the sensor provides an absolute angular measurement over a full 0°to 360°range.

The device outputs a 12-bit digital value (0–4095), corresponding to one full revolution. The measured angle is obtained by linearly mapping the raw sensor reading to the angular domain as

$$\theta = \frac{N}{4096} \cdot 360^\circ \tag{4}$$

where Ndenotes the raw encoder value. In implementation, the sensor is accessed via the I^2C interface by reading two consecutive registers (high and low bytes), which are combined and masked to obtain the 12-bit angle measurement.

Compared to incremental encoders used for joint position sensing, the AS5600 provides absolute angle measurements without requiring initialization or homing. This property makes it particularly suitable for measuring the gripper aperture, where reliable and drift-free position sensing is essential despite cable transmission compliance or mechanical backlash.

Precise alignment between the sensors and their corresponding rotating components is critical to achieving accurate measurements. Specifically, the air gap between the AS5600 sensor and its magnet must be maintained within the recommended range of 1 to 3 millimeters. The incremental encoders, conversely, are rigidly mounted to prevent misalignment and ensure reliable signal output.

By precisely capturing the motion of every joint using these two distinct sensor technologies, the system ensures the overall robustness of the haptic interaction experience.

IV. Software Design

A. *Position Mapping*

The software system establishes a real-time mapping between the physical haptic device and the virtual gripper in the PyBullet environment. The Arduino continuously transmits three values through serial communication: the planar end-effector position (x, y) in centimeters and the gripper handle angle α in degrees. These measurements are parsed by the Python simulation program and converted into the pose command of a WSG50 gripper model.

Since the physical device is designed for planar motion, only two translational degrees of freedom are mapped into the virtual workspace. Specifically, the measured horizontal displacement is mapped to the PyBullet X-axis, while the measured vertical displacement of the physical linkage is mapped to the PyBullet Z-axis. The virtual gripper remains at a fixed Y-position so that the interaction is constrained to a two-dimensional manipulation plane. The mapping is defined as

$$X_v = k_x\, x \tag{5}$$

$$Z_v = k_z\, y + Z_{\text{off}} \tag{6}$$

$$Y_v = 0 \tag{7}$$

where x and y are the measured end-effector coordinates from the hardware in centimeters, X_v, Y_v, and Z_v denote the virtual gripper position in meters, k_x and k_z are workspace scaling coefficients, and Z_{off} is a constant height offset used to keep the gripper above the virtual ground plane. In the current implementation, $k_x = 15/100$, $k_z = 5/100$, and $Z_{\text{off}} = 0.05\text{m}$. This anisotropic scaling was selected empirically to produce a comfortable and visually clear workspace in simulation.

To ensure consistent grasping orientation, the gripper base frame is initialized with a fixed rotation so that the finger closing direction aligns with the virtual Y-axis. As a result, the user perceives grasping as occurring orthogonally to the planar motion of the end effector, which matches the intended interaction design.

The handle angle measured by the AS5600 sensor is used to control the opening of the virtual gripper. The sensor output is interpreted in the range $0°$ to $360°$, where $0°$ corresponds to the fully closed state and $360°$ corresponds to the fully open state. First, the angle is normalized into an opening ratio:

$$r = \frac{\alpha - \alpha_{\min}}{\alpha_{\max} - \alpha_{\min}} \tag{8}$$

where $\alpha_{\min} = 0°$ and $\alpha_{\max} = 360°$. The ratio is then clipped to the interval $[0,1]$ and mapped to the prismatic finger joint target of the WSG50 gripper model:

$$q_f = q_{\text{closed}} + r\left(q_{\text{open}} - q_{\text{closed}}\right) \tag{9}$$

where q_f is the commanded finger joint position, and q_{closed} and q_{open} denote the joint coordinates associated with the fully closed and fully open states, respectively. This linear interpolation ensures a continuous and intuitive relationship between user finger motion and virtual gripper aperture.

In addition, the mapped vertical position is constrained to remain above the ground plane in simulation, preventing the virtual gripper from penetrating the table surface. Through this position-mapping pipeline, the system creates a direct and stable correspondence between physical motion and virtual manipulation, enabling real-time teleoperation of the gripper within the simulated environment.

B. Gripper control

*The gripper control module converts the user's measured handle a*ngle into the opening motion of the virtual WSG50 gripper and manages stable grasp execution during object interaction. In the implemented system, the AS5600 magnetic angle sensor provides the gripper command α in the range of $0°$ to $360°$, where $0°$ denotes the fully closed state and $360°$ denotes the fully open state. This angle is first normalized into an opening ratio

$$r = \frac{\alpha - \alpha_{\min}}{\alpha_{\max} - \alpha_{\min}}, \tag{10}$$

where $\alpha_{\min} = 0°$ and $\alpha_{\max} = 360°$. The normalized ratio is then clipped to $[0,1]$ and mapped to the prismatic finger joint target of the WSG50 model:

$$q_f = q_{\text{closed}} + r\left(q_{\text{open}} - q_{\text{closed}}\right), \tag{11}$$

where q_f is the commanded finger position, and q_{closed} and q_{open} represent the joint coordinates corresponding to the fully closed and fully open states, respectively. This mapping provides an intuitive one-to-one correspondence between the user's pinch motion and the virtual gripper aperture.

To drive the virtual gripper, each finger joint is controlled using PyBullet position control. For each simulation cycle, the desired finger position is updated according to the measured angle and sent to the gripper joints as a position command. In free motion, a relatively high motor force is used so that the gripper can respond rapidly to the user input. Once an object has been grasped, the holding force is reduced to maintain stable contact while avoiding excessive squeezing. This control strategy allows the gripper to remain responsive during approach and compliant during object retention.

To improve grasp robustness, a grasp-assist mechanism is introduced. When the gripper closes beyond a predefined threshold and valid contacts are detected on both sides of a candidate object, the object is attached to the gripper through a pose-following update in the simulation. At this stage, the system computes a safe closing target based on the object size along the grasp axis:

$$g_{\text{safe}} = g_{\text{obj}} + g_{\text{clr}}, \tag{12}$$

where g_{obj} is the estimated object span along the gripper closing direction and g_{clr} is a small clearance margin. The

corresponding finger joint position is then limited so that the gripper cannot continue closing beyond the allowable grasp width. In other words, after grasp capture, the user is still allowed to open the gripper for release, but additional closing motion is blocked to preserve a stable grasp configuration.

The release logic is similarly threshold-based. When the user reopens the gripper above a predefined release angle, the grasp-assist state is disabled, and the object is returned to normal free-body dynamics. This mechanism ensures that the transition between free motion, grasp acquisition, and object release remains stable and predictable in real time.

In addition to finger motion control, the gripper control module also supports object-dependent force-feedback rendering through a virtual-wall mechanism. Once a potential contact state is detected, the simulation computes a contact angle corresponding to the maximum allowable gripper closure for the current object. If the user attempts to close the gripper beyond this angle, the contact angle is transmitted back to the Arduino controller, which renders local kinesthetic resistance on the physical handle. As a result, the virtual gripper control and the physical haptic feedback remain synchronized, enabling the user to perceive object contact and stiffness while manipulating the simulated environment.

*C. Virtual En*vironment

The virtual environment is implemented in PyBullet to provide a real-time physics-based simulation for hardware-in-the-loop teleoperation. Its primary role is to maintain a synchronized digital representation of the gripper state, evaluate contact conditions during manipulation, and generate the simulation-side variables required for haptic feedback rendering. The environment runs as a continuous control loop in which the physics engine is updated at a fixed time step while sensor data from the hardware device are received asynchronously through serial communication. This architecture enables stable bidirectional coupling between the physical interface and the simulated task.

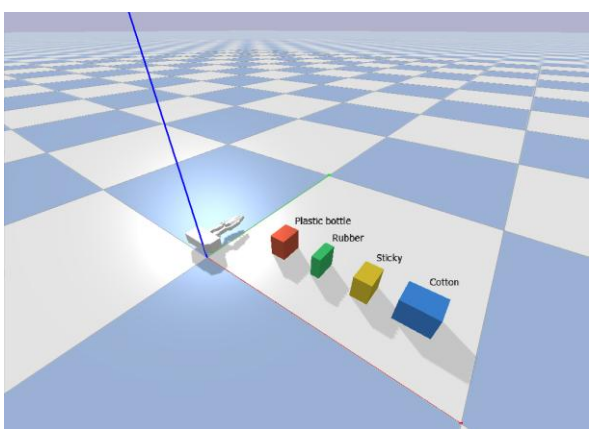

Figure 6 Virtual Environment

To improve robustness, the software separates serial communication from the physics update loop using a background thread. The serial thread continuously parses the incoming measurements and updates shared state variables, while the main simulation loop reads the latest available values and applies them to the virtual system. This decoupled design reduces blocking delays caused by communication latency and helps maintain consistent simulation timing. In addition, low-level filtering and signal clipping are used to suppress measurement noise and keep the gripper command within a valid operating range.

The environment also includes a parametric object model that supports different virtual material behaviors through adjustable stiffness-related parameters. Rather than treating all grasp targets identically, the simulation assigns each object a distinct set of contact-response coefficients, allowing the same teleoperation interface to represent materials with different apparent resistance characteristics. This object-dependent parameterization is used by the feedback module to determine when contact occurs and how strongly the physical gripper should resist further closure. In this way, the virtual environment functions not only as a geometric simulator but also as a material-response model for haptic interaction.

To enhance perceptual realism, the simulation further incorporates a visual deformation mechanism. When the virtual gripper compresses an object, the rendered object geometry is modified according to the estimated penetration level and material stiffness. Importantly, this deformation is applied only to the visual representation, while the underlying collision geometry remains unchanged. This separation preserves contact stability in the physics engine while still providing the user with an intuitive visual cue of softness or compression. As a result, the environment can convey differences in object behavior through both haptic resistance and visual appearance without compromising numerical stability.

Overall, the virtual environment serves as the computational backbone of the system. It integrates real-time communication, physics simulation, contact evaluation, material parameterization, and visual feedback into a unified framework, thereby enabling stable and responsive teleoperation experiments with closed-loop kinesthetic interaction.

V. METHODS

A. Impedance-type Hardware-in-the-Loop Interaction

This project employs an impedance control paradigm to achieve high-fidelity interaction between the user and the virtual simulation environment. Unlike traditional open-loop teleoperation, this system constructs a bidirectional hardware-in-the-loop (HIL) closed-loop architecture. The physical gripper functions as an impedance-type haptic interface, utilizing a magnetic encoder to capture the user's kinematic input (i.e., the absolute opening angle of the gripper) in real time. This physical state is synchronously mapped to a virtual WSG50 gripper within the physics engine (PyBullet).

When the virtual gripper intersects with a target object in the simulation space, the physics engine evaluates the collision dynamics in real time and extracts key constraint parameters (such as contact angle and virtual stiffness), which are then transmitted to the underlying hardware. Subsequently, the microcontroller dynamically calculates and outputs the corresponding resistive torque based on the deviation (i.e.,

penetration depth) between the user's actual physical position and the virtual constraints, thereby closing the haptic rendering loop.

B. Haptic Rendering of Object Size

To enable users to accurately perceive the size differences of virtual objects without visual assistance, the system introduces a dynamic unilateral virtual wall (UVW) mechanical model. In the simulation environment, when the fingertips of the virtual gripper contact the bounding box of an object, the physics engine precisely records the physical gripper's opening angle at that moment, defining it as the contact threshold ($\theta_{contact}$).

The low-level microcontroller continuously compares the user's real-time angle ($\theta_{current}$) with the contact threshold at an exceptionally high frequency (with a control period of approximately 8 ms). Once the user attempts to close the gripper beyond this threshold (i.e., $\theta_{current} < \theta_{contact}$), the system registers a "virtual penetration". Because larger objects trigger collisions earlier at a wider gripper aperture, their $\theta_{contact}$ is significantly greater than that of smaller objects. This dynamic threshold-based blocking mechanism ensures that when grasping objects of varying sizes, users experience mechanical resistance at different spatial positions, thereby accurately reconstructing the geometric scale of the objects at the kinematic level.

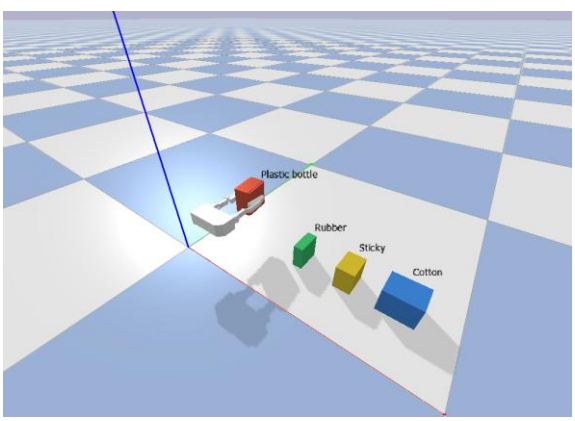

Figure 7 Gripper Interacting with the Environment

C. Material Perception via Stiffness Modulation

To address the grasping feedback of objects with diverse material properties (e.g., highly deformable soft sponges versus incompressible rigid metal blocks), the system differentiates materials by dynamically modulating the stiffness coefficient (k) of the virtual wall. On the software algorithm side, the system assigns independent mechanical stiffness attributes to each target object (for instance, 300 N/m for soft objects and 5000 N/m for rigid objects). Upon collision, this parameter is transmitted to the low-level motor controller alongside the contact angle.

The hardware end calculates the virtual restoring force resisting the finger pinch based on Hooke's Law. The motor's output torque is directly proportional to the current angular penetration depth and the object's virtual stiffness (k). Through this stiffness modulation strategy, when a user grasps a low-stiffness object, the feedback torque rises gently as the penetration depth increases, allowing the user to continue compressing the physical gripper inward, thereby simulating the elastic deformation of flexible materials perfectly. Conversely, when grasping a high-stiffness object, even a microscopic angular violation triggers a sharply amplified PWM current output, driving the motor to instantaneously generate a peak stall torque, thereby providing an insurmountable illusion of rigidity. This hardware-software synergistic mechanism successfully endows the physical gripper with the capability to distinguish multidimensional material properties.

VI. RESULTS

To assess the perceptual quality of the system, we collected user responses through a short questionnaire consisting of four evaluation items. Each question was designed to measure a different aspect of the teleoperation experience. The matrices can be seen in Table 1 Response from users. The first question evaluated whether users could distinguish between different categories of virtual objects, reflecting the overall discriminability of object-level interaction cues. The second question focused specifically on stiffness perception, examining whether the haptic feedback allowed users to identify differences in material compliance across objects. The third question assessed shape perception, that is, whether users could sense geometric differences among the grasped objects through interaction. Finally, the fourth question evaluated the quality of motion rendering in the virtual environment, indicating how well the simulated gripper motion matched the user's physical input and whether the system felt responsive and natural during operation.

Table 1 Response from users

Questions	Average Scores	Meaning
Can you tell the difference between different type of objects?	4.33	Ability to distinguish object categories
Can you tell the different stiffness between the objects?	4.33	Perceived difference in object stiffness
Can you feel the different shape of the objects?	3.83	Ability to perceive object shape variation
Does the virtual environment rendering the movement well?	4.83	Quality of motion rendering and system responsiveness

VII. DISCUSSION

A. Mechanical Design and Hardware Deployment

Through an iterative design optimization process, we identified and resolved several challenges related to both mechanical design and hardware deployment. Position tracking errors were primarily attributed to the improper mounting of the incremental encoder. When the encoder was not securely fixed, minute relative displacements between the encoder and its mount resulted in significant measurement errors. This issue was ultimately resolved by firmly fastening the encoder with screws, thereby restoring consistent system behavior at the zero-point position. In addition, during the deployment of the angle sensor, we found that the alignment between the sensor and the magnet was critical. If the AS5600 sensor and the magnet were not placed along the same axis, the measured angle exhibited noticeable errors, which further reduced the accuracy of force-feedback rendering.

To enhance the user experience, we introduced a vertical handle design. Compared to the initially adopted pinch-grip operation method, this handle provides a more robust and ergonomically sound mode of human-machine interaction, enabling users to achieve greater precision in manipulation. Furthermore, we discovered that the thickness of the gripper was a critical factor limiting tactile perception. In the initial design, the gripper structure impeded the full closure of the user's fingers, thereby diminishing sensitivity to object size. To address this issue, we thinned the gripper tips, which improved tactile feedback during grasping.

Additionally, we incorporated mounting holes into the front section of the gripper structure to facilitate cable-tie installation. These improvements not only enhanced force transmission efficiency but also provided a convenient mechanism for controlling the opening and closing actions of the gripper. Finally, from a hardware integration perspective, it would be preferable to use encoders that provide absolute position measurements. This would eliminate the need to manually reset the mechanism to a zero position every time the program restarts, thereby improving usability and deployment efficiency. Overall, these improvements demonstrate the critical importance of precise mechanical design and reliable sensor integration in achieving accurate perception and effective haptic interaction.

B. Virtual Environment and Software Design

Initially, the system exhibited anomalous behavior where the physical gripper's rendered angle would abruptly reset to zero upon exceeding 180 degrees. Analysis revealed that the original calibration logic constrained the angle difference within a [-180°, 180°] domain. Consequently, angles exceeding 180 degrees were interpreted as negative wrap-arounds, which subsequently triggered the system's deadband clamp, nullifying the data. This limitation was resolved by redesigning the mapping algorithm to project the AS5600 magnetic encoder readings into a strictly continuous [0°, 360°] coordinate space. Combined with a dedicated zero-point offset (CLOSED_OFFSET) and directional scaling, the system achieved seamless and monotonic angle tracking throughout the gripper's full range of motion.

A major challenge involved severe mechanical oscillations and acoustic resonance during static grasping. Root-cause analysis identified two contributing factors across the software and hardware layers. In the software domain, the unconstrained execution rate of the microcontroller's main loop caused the exponential moving average (EMA) low-pass filter to update too rapidly, neutralizing its damping characteristics against serial communication noise. This was mitigated by implementing a strict 8-ms timer-based control loop, restoring the filter's time constant. In the hardware domain, driving the DC motor at the default low PWM frequency (~976 Hz) induced strong electromagnetic resonance and physical vibration. By reassigning the actuation signal to a hardware timer capable of ultrasonic frequency modulation (31.25 kHz), the electromagnetic noise was shifted beyond human perception, yielding highly smooth and silent force rendering.

During early force-feedback testing, the actuator generated an erroneous "pulling" (closing) force instead of the expected resistive (opening) force upon virtual contact. Initial attempts to invert the software directional flags proved ineffective due to an incomplete H-bridge configuration. The generic motor driver was operating with only one active directional pin, meaning reversing the signal resulted in passive braking rather than active reverse torque. This was rectified by expanding the low-level control architecture to actively drive both directional input pins (IN1 and IN2) of the motor driver. This modification unlocked true bidirectional torque modulation, allowing the unilateral virtual wall to correctly exert resistive forces against the user's grip.

Early simulation testing revealed that objects with different visual appearances and masses provided identical haptic feedback. This discrepancy arose because mass in standard rigid-body physics engines (such as PyBullet) dictates inertial properties but does not naturally translate to haptic stiffness. To address this, a dynamic stiffness-mapping architecture was introduced in the Python simulation layer. By assigning distinct virtual spring coefficients (k) to specific object IDs—for instance, 300 N/m for highly deformable objects and 5000 N/m for rigid bodies—the physical hardware was able to dynamically modulate its torque output based on both the penetration depth and the specific material properties. This decoupled approach successfully bridged the gap between rigid-body simulation and deformable haptic perception.

VIII. Conclusion

This project presented the design and implementation of a wearable haptic teleoperation system for virtual gripper manipulation. The proposed system integrates a 2-DOF planar linkage for position input, a 1-DOF force-feedback gripper for kinesthetic interaction, incremental encoders for joint sensing, and an AS5600 magnetic angle sensor for gripper aperture measurement. A complete hardware-software pipeline was developed to map user motion into a PyBullet-based virtual environment and to render object-dependent force feedback during grasping.

Experimental results and user evaluation showed that the system can achieve stable position tracking, responsive gripper control, and distinguishable haptic rendering for objects with different stiffness properties. The virtual environment also

provided consistent motion rendering and supported intuitive teleoperation. Through iterative refinement of the mechanical structure, sensor deployment, and control implementation, the overall usability and reliability of the system were significantly improved.

Overall, the project demonstrates a practical and low-cost approach for combining real-time teleoperation, virtual interaction, and kinesthetic feedback in a compact haptic interface. Future work will focus on improving sensing accuracy, reducing mechanical friction and backlash, and further enhancing force-feedback fidelity through more advanced control and interaction models.

ACKNOWLEDGMENT

The authors would like to express their sincere gratitude to Professor Morimoto and the teaching assistant, Anoush Sepehri, for their continuous guidance, insightful feedback, and generous support throughout the course of this project. Their assistance was invaluable in the design, implementation, and refinement of the system.

REFERENCES

[1] L. Shao, J. Xu, J. Zhang, and H. Liu, "DexPilot: Vision-Based Teleoperation for Dexterous Robotic Hand-Arm System," Robotics: Science and Systems (RSS), 2021. Available: https://arxiv.org/abs/2109.09109

[2] S. Peng, M. Yu, X. Geng, X. Cheng, and P. Wang, "A Lightweight Exoskeleton Force-Feedback Glove (EFFG) for Teleoperation," Machines, vol. 13, no. 3, p. 199, 2023. Available: https://doi.org/10.3390/machines13030199

[3] R. Wang, L. Jiang, J. Li, Z. Dai, M. Liu, P. Lv, X. Li, and M. Zhu, "Tactile and Kinesthetic Communication Glove with Fusion of Triboelectric Sensing and Pneumatic Actuation," Nano Energy, vol. 131, part A, p. 110273, 2024. doi: 10.1016/j.nanoen.2024.110273.

[4] D. J. Cassar and M. A. Saliba, "A Force Feedback Glove Based on Magnetorheological Fluid: Preliminary Design Issues," in Proc. IEEE Mediterranean Electrotechnical Conf. (MELECON), 2010, vol. 3, pp. 618–623. doi: 10.1109/MELCON.2010.5476012.

[5] "Haptic Hardness Detection with Teleoperated Two-Finger Gripper," 2023. [Online]. Available: https://charm.stanford.edu/ME327/2023-Group6.